Syracuse University
SURFACE

Physics | College of Arts and Sciences

6-27-2008

# Enhanced Diffusion and Ordering of Self-Propelled Rods

Aparna Baskaran
*Syracuse University*

M. Cristina Marchetti
*Syracuse University*, mcm@physics.syr.edu

Follow this and additional works at: http://surface.syr.edu/phy

Part of the Physics Commons

Repository Citation
arXiv:0806.4559v1

This Article is brought to you for free and open access by the College of Arts and Sciences at SURFACE. It has been accepted for inclusion in Physics by an authorized administrator of SURFACE. For more information, please contact surface@syr.edu.

arXiv:0806.4559v1 [cond-mat.soft] 27 Jun 2008

# Enhanced diffusion and ordering of self-propelled rods

Aparna Baskaran[1] and M. Cristina Marchetti[2]

[1] *Physics Department, Syracuse University, Syracuse NY 13244*

[2] *Physics Department and Syracuse Biomaterials Institute, Syracuse University, Syracuse, NY 13244, USA*

(Dated: June 27, 2008)

Starting from a minimal physical model of self propelled hard rods on a substrate in two dimensions, we derive a modified Smoluchowski equation for the system. Self -propulsion enhances longitudinal diffusion and modifies the mean field excluded volume interaction. From the Smoluchowski equation we obtain hydrodynamic equations for rod concentration, polarization and nematic order parameter. New results at large scales are a lowering of the density of the isotropic-nematic transition and a strong enhancement of boundary effects in confined self-propelled systems.

PACS numbers: 87.18.Ed, 47.54.-r, 05.65.+b

Self propelled particles consume energy from internal or external sources and dissipate it by actively moving through the medium that they inhabit. Assemblies of interacting self-propelled particles (SPP) exhibit rich collective behavior, such as nonequilibrium phase transitions between disordered and ordered (possibly moving) states and novel long-range correlations. Biologically relevant systems that belong to this class include fish schools, bird flocks [1], bacterial colonies [2] and cell extracts of cytoskeletal filaments and associated motor proteins [3]. A non-living realization may be a vibrated monolayer of granular rods [4]. Collections of SPP have been the focus of extensive experimental [3, 4, 5] and theoretical studies in recent years. A number of distinct theoretical approaches have proved fruitful for understanding the complex dynamics of these nonequilibrium systems. These include numerical studies of simple models [6, 7, 8, 9], inspired by the seminal work of Vicsek [10], and phenomenological continuum theories based on general symmetry arguments [11]. Recent work on deriving the hydrodynamic equations from specific microscopic models has led to some insight into the origin of the collective behavior of these systems [12, 13, 14, 15, 16]. An important open question that we address here is the interplay between self propulsion and steric effects arising from the shape of the particle in controlling the large scale physics.

In this paper we consider a physical model of self-propelled hard rods that interact with each other solely through excluded volume. The rods move on a passive substrate. Self-propulsion is modeled as a nonequilibrium velocity $v_0$ along the direction of the rods' long axes. The goal of our work is to understand how self-propulsion modifies the diffusion processes and the mean-field Onsager excluded volume interaction [17]. Using the tools of nonequilibrium statistical mechanics we derive a *modified* Smoluchowski equation that differs from the familiar version for thermal hard rods [17] in three respects. The first and obvious modification is a convective mass flux at the self-propulsion speed $v_0$ along the direction of orientation of the rod. Secondly, self-propulsion enhances the longitudinal diffusion constant $D_\parallel$ of the rods, according to $D_\parallel \to D_\parallel(1+v_0^2/k_BT)$. This enhancement arises because self-propelled particles perform a *persistent random walk*, as recently pointed out by other authors [18]. Finally, the momentum exchanged by two rods upon collision is rendered highly anisotropic by self-propulsion thus modifying the Onsager form of the excluded volume interaction. This leads to novel anisotropic forces and torques from steric repulsion in the Smoluchowski equation.

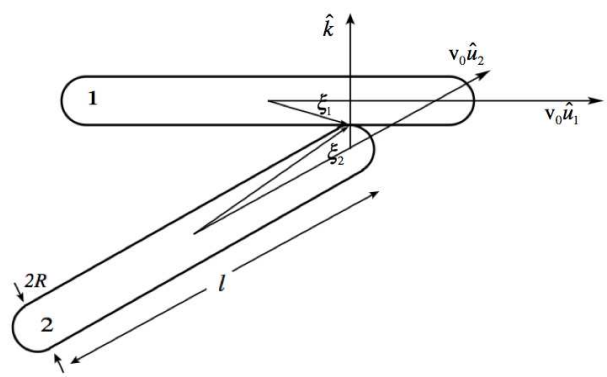


FIG. 1: A cap-to-side collision of two self-propelled hard rods (the width of the rod is exaggerated for clarity). $\widehat{\mathbf{k}}$ is a unit vector from rod 2 to rod 1 normal to the point of contact. Points on the side of the rods are identified by vectors $\xi_i$.

These modifications of the Smoluchowski equation have dramatic consequences for the properties of the system on hydrodynamic scales. This is illustrated by two examples. First, we show that the additional momentum transfer from self-propulsion lowers the density of the isotropic-nematic transition, thereby providing a microscopic identification for the physical mechanism responsible for the enhancement of orientational order observed in numerical simulations of motility assays [8]. Secondly, we demonstrate that self-propulsion greatly enhances the effect of confinement and the role of boundaries.

*The microscopic model.* We consider quasi two-dimensional hard rods of length $\ell$ and thickness $2R$ confined to a plane, as shown in Fig. 1. The $i$-th rod is characterized by the position $\mathbf{r}_i$ of its center of mass and a unit vector $\hat{\mathbf{u}}_i = (\cos\theta_i, \sin\theta_i)$ directed along its long axis. Each rod free-streams on the substrate, until it collides with another rod. The collision results in instantaneous linear and angular momentum transfer such that the total energy, linear and angular momenta of the two rods are conserved. The microdynamics of the system is governed by coupled Langevin equations,

$$\frac{\partial \mathbf{v}_i}{\partial t} = -\sum_j T(i,j)\,\mathbf{v}_i + F\widehat{\mathbf{u}}_i - \boldsymbol{\zeta}_i \cdot \mathbf{v}_i + \boldsymbol{\eta}_i(t)\,, \quad (1)$$

$$\frac{\partial \omega_i}{\partial t} = -\sum_j T(i,j)\,\omega_i - \zeta^R \omega_i + \eta_i^R(t)\ , \quad (2)$$

where $\mathbf{v}_i = \partial_t \mathbf{r}_i$ and $\omega_i = \partial_t \theta_i$ are the center of mass and angular velocities, $\boldsymbol{\zeta}_i$ is the friction tensor, with $\zeta^i_{\alpha\beta} = \zeta_\parallel \hat{u}_{i\alpha}\hat{u}_{i\beta} + \zeta_\perp(\delta_{\alpha\beta} - \hat{u}_{i\alpha}\hat{u}_{i\beta})$, $\zeta_R$ is the rotational friction, and the mass of the rods has been set to one. The second term on the right hand side of Eq. (1) describes self propulsion as a center of mass force $F$ acting along the long axis of each rod. This force is nonequilibrium in origin and arises from an internal or external propulsion mechanism. The random forces $\boldsymbol{\eta}_i$ and $\eta_i^R$ describe Markovian white noise with correlations $\langle \eta_{i\alpha}(t)\,\eta_{j\beta}(t')\rangle = \Delta^i_{\alpha\beta}\delta_{ij}\delta(t-t')$ and $\langle \eta_i^R(t)\,\eta_j^R(t')\rangle = \Delta^R\delta_{ij}\delta(t-t')$. For simplicity we assume the equilibrium-like form $\Delta^i_{\alpha\beta} = 2k_BT_a\zeta^i_{\alpha\beta}$ and $\Delta^R = 2k_BT_a\zeta^R/I$, with $I = \ell^2/12$ the moment of inertia of the rod and $T_a$ an effective temperature defined by these relationships. Finally, the collision operator $T(i,j)$ generates the instantaneous momentum transfer between rods at contact and is given by

$$T(1,2) = \int_{s_1,s_2}\int_{\hat{\mathbf{k}}} \left|\mathbf{V}_{12}\cdot\widehat{\mathbf{k}}\right| \Theta\left(-\mathbf{V}_{12}\cdot\widehat{\mathbf{k}}\right) \times \delta(\Gamma_{cont})\,(b_{12}-1)\ , \quad (3)$$

where $\widehat{\mathbf{k}}$ is the unit normal at the point of contact of the two rods directed from rod 2 to rod 1, as shown in Fig. 1. The function $\Gamma_{cont}(\mathbf{r}_1,\mathbf{r}_2,\boldsymbol{\xi}_1,\boldsymbol{\xi}_2)$ is nonzero when two rods are at contact and zero otherwise. Here $\boldsymbol{\xi}_i$ is a vector from the center of mass of the $i$-th rod to the point of contact, $\boldsymbol{\xi}_i = s_i\hat{\mathbf{u}}_i \pm R\widehat{\mathbf{k}}$, where $-\ell/2 \le s_i \le \ell/2$ parametrizes the distance of points along the axis of each rod from the center of mass and $\int_{s_i}\ldots \equiv \int_{-\ell/2}^{\ell/2}\ldots ds_i$. Also, $\mathbf{V}_{12} = \mathbf{v}_1 - \mathbf{v}_2 + \boldsymbol{\omega}_1\times\boldsymbol{\xi}_1 - \boldsymbol{\omega}_2\times\boldsymbol{\xi}_2$ is the relative velocity of the two rods at the point of contact. Finally, the operator $b_{12}$ replaces precollisional velocities with their postcollisional values, as obtained by requiring energy and momentum conservation. The explicit calculation of the $T$ operator is given in [19].

*Modified Smoluchowski equation.* We are interested here in the overdamped limit, when inertial effects are negligible and the low density dynamics is described by a Smoluchowski equation for the the probability distribution $c(x,t)$, with $x = (\mathbf{r},\theta)$, of rods at a point $\mathbf{r}$ oriented in the direction $\theta$. The derivation of the Smoluchowski equation for self-propelled hard rods can be carried out following closely that of thermal hard rods and is given in [19]. Here, we outline the key steps involved.

1. First, the noise averaged statistical mechanics of a system described by a set of coupled Langevin equations is given in terms of the Liouville-Fokker-Planck equation governing the dynamics of an $N$ particle distribution function [20]. This can in turn be converted into a hierarchy of equations for reduced distribution functions analogous to the BBGKY hierarchy for Hamiltonian systems. At low density, neglecting two particle correlations, the first equation of the hierarchy gives a closed Boltzamnn-Fokker-Planck equation for the one particle distribution function $f(x,p,t)$, with $p = (\mathbf{v},\omega)$.

2. The probability distribution is $c(x,t) = \int_p f(x,p,t)$. In the regime of large friction, the velocities of the rods decay to a stationary value on microscopic time scales. We use an approximate solution of the noninteracting Fokker-Planck equation valid in the large friction regime, $f(x,p,t) = c(x,t)\,f_M(p|\theta)$, with $f_M \sim \exp\left(-\frac{1}{2k_BT_a}(\mathbf{v} - v_0\widehat{\mathbf{u}})^2 - \frac{1}{2k_BT_a}I\omega^2\right)$ a Maxwellian distribution centered at the self-propulsion velocity $v_0\hat{\mathbf{u}}$. With this ansatz, the Bolztmann-Fokker-Planck equation can be transformed to a closed equation for the spatial probability distribution, $c$.

3. To obtain this closed equation we need to evaluate the mean force and torque on a given rod due to all other rods in the fluid, namely $\langle T(1,2)\mathbf{v}_1\rangle_M$ and $\langle T(1,2)\omega_1\rangle_M$, where $\langle\ldots\rangle_M = \int_{p_1,p_2}\ldots f_M(p_1|\theta_1)f_M(p_2|\theta_2)$. In the absence of self propulsion, this average can be readily carried out and yields the Onsager excluded volume interaction. For finite self propulsion, $f_M$ depends on the angular coordinate and hence averaging over velocities induces orientational correlations that cannot be incorporated exactly. To make progress, we let $\mathbf{v}_i' = \mathbf{v}_i - \hat{\mathbf{u}}_i v_0$ in the calculation of the velocity averages and then neglect the coupling between velocity and angular correlations by approximating $\langle T(1,2)\mathbf{v}_1\rangle_M \simeq \langle T(1,2)\mathbf{v}_1\rangle_{M|_{v_0=0}} + \langle T(1,2)\mathbf{v}_1\rangle_{v_0}$, where the second term is averaged over $f_{v_0}(p_1)f_{v_0}(p_2)$, with $f_{v_0}(p_i) = \delta(\mathbf{v}_i - v_0\hat{\mathbf{u}}_\mathbf{i})\,\delta(\omega_i)$.

The result is the modified Smoluchowski equation:

$$\begin{aligned}\partial_t c + v_0\partial_\parallel c &= D_R\partial_\theta c + (D_\parallel + D_S)\partial_\parallel^2 c + D_\perp\partial_\perp^2 c \\ &\quad -\frac{1}{I\zeta_R}\partial_\theta\tau_{ex} - \nabla\cdot\boldsymbol{\zeta}^{-1}\cdot\mathbf{F}_{ex} \\ &\quad -\frac{1}{I\zeta_R}\partial_\theta\tau_{SP} - \nabla\cdot\boldsymbol{\zeta}^{-1}\cdot\mathbf{F}_{SP}\ , \end{aligned} \quad (4)$$

where $\partial_\parallel = \hat{\mathbf{u}}\cdot\boldsymbol{\nabla}$ and $\boldsymbol{\partial}_\perp = \boldsymbol{\nabla} - \hat{\mathbf{u}}(\hat{\mathbf{u}}\cdot\boldsymbol{\nabla})$. The convective term on the left hand side of (4) is a trivial

consequence of self propulsion and describes mass flux along the long axis of the rod. The first three terms on the right hand side of the equation describe translational diffusion longitudinal ($D_\parallel$) and transverse ($D_\perp$) to the rod's long axis and rotational diffusion ($D_R$). For long thin rods $D_\parallel = 2D_\perp = D$. At low density $D = k_B T_a/\zeta_\parallel$ and $D_R = 6D/\ell^2$. A novel consequence of self-propulsion is the enhancement of longitudinal diffusion by $D_S = v_0^2/\zeta_\parallel$. This can be understood by noting that a diffusing rod performs a random walk with a step length $x_\alpha = \zeta^{-1}_{\alpha\beta} v_\beta$. For thermal systems the rod's velocity is isotropic on average and has magnitude $v_{th} \sim \sqrt{k_B T_a}$. In this case the anisotropy of diffusion arises solely from the anisotropy of the friction tensor. For self-propelled rods the step length along the long direction of the rod is enhanced, yielding an additional contribution to the longitudinal diffusion coefficient. Equivalently, longitudinal diffusion of a self-propelled rod can be reformulated as a persistent random walk where the rod has a bias $\sim v_0$ towards steps along its long axis [18]. The next three terms in (4) describe excluded volume effects within the mean-field approximation due to Onsager. The corresponding forces and torque can be derived from the familiar excluded volume potential as $\tau_{ex} = -\partial_\theta V_{ex}$ and $\mathbf{F}_{ex} = -\boldsymbol{\nabla} V_{ex}$, with $V_{ex}(x_1) = k_B T_a c(x_1,t) \int_{\boldsymbol{\xi}_{12}} \int_{\hat{\mathbf{u}}_2} |\hat{\mathbf{u}}_1 \times \hat{\mathbf{u}}_2|\, c\left(\mathbf{r}_1 + \boldsymbol{\xi}_{12}, \theta_2, t\right)$, with $\boldsymbol{\xi}_{12} = \boldsymbol{\xi}_1 - \boldsymbol{\xi}_2$. Finally, $\tau_{SP}$ and $\mathbf{F}_{SP}$ describe, within a mean-field approximation, the additional torque and force due to anisotropic linear and angular momentum transfer during the collision of two self-propelled rods,

$$\begin{pmatrix} \mathbf{F}_{SP} \\ \tau_{SP} \end{pmatrix} = v_0^2 \int_{x_2, s_1, s_2, \hat{\mathbf{k}}} \begin{pmatrix} \widehat{\mathbf{k}} \\ \hat{\mathbf{z}} \cdot (\boldsymbol{\xi}_1 \times \widehat{\mathbf{k}}) \end{pmatrix} [\hat{\mathbf{z}} \cdot (\hat{\mathbf{u}}_1 \times \hat{\mathbf{u}}_2)]^2 \times \Theta(-\hat{\mathbf{u}}_{12} \cdot \widehat{\mathbf{k}}) \delta\left(\Gamma_{cont}\right) c(x_1,t) c(x_2,t), \qquad (5)$$

with $\hat{\mathbf{u}}_{12} = \hat{\mathbf{u}}_1 - \hat{\mathbf{u}}_2$. In Onsager's mean field model, two thin rods of length $\ell$ exchange an average momentum $\langle |\Delta \mathbf{v}| \rangle \nu_{coll} \sim k_B T_a/\ell$ per unit time upon collision, with $\langle |\Delta \mathbf{v}| \rangle \sim \sqrt{k_B T_a}$ and $\nu_{coll} = v_{th}/\ell \sim \sqrt{k_B T_a}/\ell$. When rods are self propelled there are anisotropic contributions to both the momentum exchanged ($\langle |\Delta \mathbf{v}| \rangle \sim v_0 |\hat{\mathbf{u}}_1 \times \hat{\mathbf{u}}_2|$) and the collision rate ($\nu_{coll} \sim v_0 |\hat{\mathbf{u}}_1 \times \hat{\mathbf{u}}_2|/\ell$). These yield the new anisotropic steric forces and torques in Eq. (5).

*Hydrodynamics.* We now use the modified Smoluchowski equation to obtain coarse-grained equations that describe the dynamics of the systems on wavelengths long compared to the length of the rods and on time scales long compared to the collision time. In this regime the dynamics is controlled by the "slow variables" corresponding to the conserved densities (here only the concentration of filaments $\rho = \int_{\hat{\mathbf{u}}} c(x,t)$ ) and the fields associated with possible broken symmetries. In a liquid of self-propelled rods, both polar and nematic order are possible, described by a polarization vector $\mathbf{P}(\mathbf{r},t) = \int_{\hat{\mathbf{u}}} \widehat{\mathbf{u}} c(x,t)$ and the nematic alignment tensor $Q_{\alpha\beta}(\mathbf{r},t) = \int_{\hat{\mathbf{u}}} (\widehat{u}_\alpha \widehat{u}_\beta - \frac{1}{2}\delta_{\alpha\beta}) c(x,t)$, respectively. Since each rod has a self propulsion velocity $v_0 \widehat{\mathbf{u}}$, the polarization is also proportional to the self propulsion flow field. The equations for these continuum fields are obtained by taking the corresponding moments of the Smoluchowski equation (4) and are given by

$$\partial_t \rho + v_0 \nabla \cdot \mathbf{P} = D_\rho \nabla^2 \rho + D_Q \boldsymbol{\nabla}\boldsymbol{\nabla} : \rho \mathbf{Q} \qquad (6)$$

$$\partial_t \mathbf{P} + D_R \mathbf{P} - \lambda \mathbf{P} \cdot \mathbf{Q} + v_0 \boldsymbol{\nabla} \cdot \mathbf{Q} + \frac{v_0}{2} \boldsymbol{\nabla} \rho + \lambda' [3(\mathbf{P} \cdot \boldsymbol{\nabla})\mathbf{P} - \frac{1}{2} \boldsymbol{\nabla} P^2 - \mathbf{P} \boldsymbol{\nabla} \cdot \mathbf{P}] = D_b \nabla^2 \mathbf{P} + (D_{spl} - D_b) \boldsymbol{\nabla}\boldsymbol{\nabla} \cdot \mathbf{P} \qquad (7)$$

$$\partial_t \mathbf{Q} + 4 D_R \left(1 - \frac{\rho}{\rho_{IN}}\right) \mathbf{Q} + v_0 \mathbf{F} = -\lambda'' \left( \frac{3}{5} \mathbf{P} \cdot \boldsymbol{\nabla} \mathbf{Q} + \frac{1}{48} \mathbf{Q} \boldsymbol{\nabla} \cdot \mathbf{P} + \frac{1}{48} \mathbf{G} + \frac{1}{96} \mathbf{F} \right) + \frac{D_Q}{4} (\boldsymbol{\nabla}\boldsymbol{\nabla} - \frac{1}{2} \mathbf{1}) \rho \qquad (8)$$

where $F_{\alpha\beta} = (\partial_\alpha P_\beta + \partial_\beta P_\alpha - \delta_{\alpha\beta} \boldsymbol{\nabla} \cdot \mathbf{P})$ and $G_{\alpha\beta} = Q_{\alpha\gamma} \partial_\gamma P_\beta + Q_{\beta\gamma} \partial_\gamma P_\alpha - \delta_{\alpha\beta} Q_{\sigma\gamma} \partial_\gamma P_\sigma$. All $\lambda$ parameters in Eqs. (7) and (8) are proportional to $v_0^2$ and vanish in the absence of self propulsion. All diffusion constants are enhanced by self-propulsion via additive terms proportional to $D_S$. Finally, we have suppressed in Eqs. (6-8) excluded volume corrections to the diffusive terms, nonlinear terms of second order in gradients, and corrections to the convective terms beyond linear in $v_0$. The complete hydrodynamic equations with explicit expressions for the various coefficients can be found in Ref. [19].

The stable homogeneous stationary solution of Eqs. (6-8) are the bulk states of the self-propelled system. Two such states are possible: an isotropic state, with $\rho =$ constant, $\mathbf{P} = 0$, $Q_{\alpha\beta} = 0$, and a nematic state, with $\rho =$ constant, $\mathbf{P} = 0$ and $Q_{\alpha\beta} \neq 0$. Hard core interactions and self-propulsion modeled simply as a body force are not sufficient to generate a bulk polar state, with

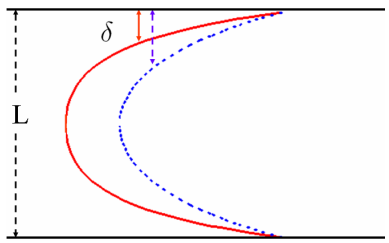


FIG. 2: (color online) The polarization in a channel of width $L$ for $\delta/L = 0.2$ (solid) and $\delta/L = 0.6$ (dashed).

$\mathbf{P} \neq 0$. Either shape or mass distribution asymmetry of the driven particles or hydrodynamic interactions are essential to obtain a macroscopic polar (moving) state. Self-propulsion has, however, a profound effect on the isotropic-nematic transition which occurs at the density $\rho_{IN}(v_0) = \rho_N/(1 + \frac{v_0^2}{5k_BT})$, where $\rho_N = 3/(\pi\ell^2)$ is the Onsager transition density. The transition occurs where the coefficient of the term linear in $Q_{\alpha\beta}$ on the right hand side of Eq. (8) changes sign, signaling the unstable growth of nematic fluctuations. This enhancement of orientational order has been observed in numerical simulations of actin motor assays, where actin filaments move on a substrate grafted with motor proteins [8]. It arises from the additional torque $\tau_{SP}$ that self-propelled rods experience upon collision as compared to thermal rods. This enhances entropic ordering and aligns the rods [21].

Although no bulk polar order is possible in our system, self-propulsion greatly enhances the length scale over which polarization fluctuations decay. As a result boundaries pay a crucial role in self propelled systems. To illustrate this we consider a self-propelled 2d hard rod fluid confined in the channel of width $L$ between two boundaries, as shown in Fig. 2. We assume that the boundaries induce polarity by forcing all rods to align in the same direction, i.e., $P_x(-L/2) = P_x(L/2) = P_0$. In this geometry the density is constant. One can easily solve for the polarization profile across the channel with the result $P_x(y) = P_0 \cosh(y/\delta)/\cosh(L/2\delta)$, where $\delta = \sqrt{D_b/D_R} = \ell/2\sqrt{5/2 + v_0^2/k_BT}$ is the boundary layer width over which the polarization penetrates in the channel. In the absence of self-propulsion $\delta \sim \ell$, i.e., a finite polarization at the boundary decays (via rotational diffusion) over a length scale of order $\ell$. For large self-propulsion velocity, $\delta \sim |v_0|$. If $L \sim \delta$ the entire channel is effectively polarized. We stress that numerical simulations of self-propelled rods on a substrate have indeed observed large correlated regions of finite polarization, but never an ordered bulk state. We expect that the boundary layer length $\delta$ also sets the scale of correlations in bulk systems. Finally, as shown in [15], Eqs. (6-8) yield two important properties of fluctuations in self-propelled systems. First, the isotropic state can support sound-like propagating density waves for a range of wavevectors above a critical value of $v_0$. Secondly, large number fluctuations always destabilize the homogeneous nematic state. We refer the reader to Ref. [15] for a complete description of both results.

In summary, we have analyzed a simple model that captures two crucial properties of self-propelled systems: the orientable shape of the particles and the self propulsion. Using the tools of nonequilibrium statistical mechanics we have derived a modified Smoluchowski equation for SPP and used it to identify the microscopic origin of several observed or observable large scale phenomena.

This work was supported by the NSF on grants DMR-0305407 and DMR-0705105.

[1] J. Toner and Y. Tu, Phys. Rev. Lett. **75**, 4326 (1995); J. Toner, Y. Tu and S. Ramaswamy, Ann. Phys. **318**, 170 (2005).
[2] O. A. Igoshin, R. Welch and D. Kaiser, PNAS, **101**, 4256 (2004).
[3] F. J. Nedelec, T. Surrey, A. C. Maggs and S. Leibler, Nature **389**, 305 (1997).
[4] V. Narayanan, S. Ramaswamy and N. Menon, Science **317**, 105 (2007); A. Kudrolli, G. Lumay, D. Volfson and L. S. Tsimring, Phys. Rev. Lett. **100**, 058001 (2008).
[5] A. Sokolov, I. S. Aranson, J. O. Kessler and R. E. Goldstein, Phys. Rev. Lett. **98**, 158102 (2007).
[6] M. R. D'Orsogna, Y. L. Chuang, A. L. Bertozzi and L. S. Chayes, Phys. Rev. Lett.**96**, 104302 (2006).
[7] H. Chate, F. Ginelly and R. Montagne, Phys. Rev. Lett., **96**, 180602 (2006).
[8] P. Kraikivski, R. Lipowsky and J. Kierfeld, Phys. Rev. Lett. **96**, 258103 (2006).
[9] F. Peruani, A. Deutsch and M. Bär, Phys. Rev. E **74**, 030904 (2006).
[10] T. Vicsek, A. Czirok, E. Ben-Jacob, I. Cohen and O. Shochet, Phys. Rev. Lett. **75**, 1226 (1995).
[11] R. A. Simha and S. Ramaswamy, Phys. Rev. Lett., **89**, 058101 (2002); S. Ramaswamy, R. A. Simha and J. Toner, Europhys. Lett. **62** 196 (2003).
[12] I. S. Aranson and L. Tsimring, Phys. Rev. E. **71**, 050901(R) (2005).
[13] E. Bertin, M. Droz and G. Gregoire, Phys. Rev.E, **74**, 022101 (2006).
[14] T. B. Liverpool and M. C. Marchetti, Phys. Rev. Lett. **90**, 138102 (2003); A. Ahmadi, M. C. Marchetti, T. B. Liverpool, Phys. Rev. E **74**, 061913 (2006).
[15] A. Baskaran and M. C. Marchetti, Phys. Rev. E **77**, 011920 (2008).
[16] D. Saintaillan and M. J. Shelley, Phys. Rev. Lett., **100**, 178103 (2008).
[17] M Doi, S. F Edwards, *The Theory of Polymer Dynamics*, Oxford University Press (1986).
[18] D. Selmeczi, S. Mosler, P. H. Hagedorn, N. B. Larsen, and H. Flyvbjerg, Biophys. J. **89**, 912 (2005); F. Peruani, L. G. Morelli, Phys. Rev. Lett, **99**,010602 (2007).
[19] A. Baskaran and M. C. Marchetti, to be published.
[20] R. Zwanzig, *Nonequilibrium Statistical Mechanics*, Oxford University Press (2001).
[21] No enhancement of orientational order occurs if the self-propulsion velocity is normal to the rods' long axis.