Syracuse University
SUrface

Mechanical and Aerospace Engineering

L.C. Smith College of Engineering and Computer Science

1-1-2004

The Open Assembly Model for the Exchange of Assembly and Tolerance Information: Overview and Example

M. M. Baysal
Syracuse University, Department of Mechanical, Aerospace & Manufacturing Engineering, Knowledge Based Engineering Laboratory, mmbaysal@syr.edu

U. Roy
Syracuse University, Department of Mechanical, Aerospace & Manufacturing Engineering, Knowledge Based Engineering Laboratory, uroy@ecs.syr.edu

R. Sudarsan
George Washington University, Engineering Department ; National Institute of Standards & Technology, Manufacturing Systems Integration Division, sudarsan@cme.nist.gov

R. D. Sriram
National Institute of Standards & Technology, Integration Division, Design and Process Group Manufacturing Systems, sriram@nist.gov

K. W. Lyons
National Institute of Standards & Technology, Systems Integration Division, Design and Process Group Manufacturing, klyons@cme.nist.gov

Follow this and additional works at: http://surface.syr.edu/mae

Part of the Mechanical Engineering Commons

Recommended Citation

Baysal, M. M.; Roy, U.; Sudarsan, R.; Sriram, R. D.; and Lyons, K. W., "The Open Assembly Model for the Exchange of Assembly and Tolerance Information: Overview and Example" (2004). *Mechanical and Aerospace Engineering.* Paper 1.
http://surface.syr.edu/mae/1

This Conference Document is brought to you for free and open access by the L.C. Smith College of Engineering and Computer Science at SUrface. It has been accepted for inclusion in Mechanical and Aerospace Engineering by an authorized administrator of SUrface. For more information, please contact surface@syr.edu.

Proceedings of The 2004 ASME International Design Engineering Technical Conferences
& Computers and Information in Engineering Conference
DETC2004/CIE'04
September 28 - October 2, Salt Lake City, Utah

CIE-2004-60

THE OPEN ASSEMBLY MODEL FOR THE EXCHANGE OF ASSEMBLY AND TOLERANCE INFORMATION: OVERVIEW AND EXAMPLE

M. M. Baysal
Knowledge Based Engineering Laboratory
Dept. of Mechanical, Aerospace & Manufacturing Eng.
Syracuse University
Syracuse, NY 13244-1240
Email: mmbaysal@syr.edu

U. Roy
Knowledge Based Engineering Laboratory
Dept. of Mechanical, Aerospace & Manufacturing Eng.
Syracuse University
Syracuse, NY 13244-1240
Email: uroy@ecs.syr.edu

R. Sudarsan
Engineering Management and Systems Engineering Department, George Washington University and Guest Researcher at Manufacturing Systems Integration Division
National Institute of Standards & Technology
Gaithersburg, MD 20899
Email: sudarsan@cme.nist.gov

R. D. Sriram
Design and Process Group Manufacturing Systems Integration Division
National Institute of Standards & Technology
Gaithersburg, MD 20899
Email: sriram@nist.gov

K. W. Lyons
Design and Process Group Manufacturing Systems Integration Division
National Institute of Standards & Technology
Gaithersburg, MD 20899
Email: klyons@cme.nist.gov

ABSTRACT

In early design phases an effective information exchange among CAD (Computer Aided Design) tools depends on a standardized representation for the product data in all PLM (Product Lifecycle Management) tools. The NIST Core Product Model (CPM) and its extension are proposed to provide the required base-level product model that is open, non-proprietary, generic, extensible, independent of any one product development process and capable of capturing the full engineering context commonly shared in product development [1]. The Open Assembly Model (OAM) Model extends CPM to provide a standard representation and exchange protocol for assembly. The assembly information model emphasizes the nature and information requirements for part features and assembly relationships. The model includes both assembly as a concept and assembly as a data structure. For the latter it uses the model data structures of ISO 10303, informally known as the Standard for the Exchange of Product model data (STEP)[2]. The objective of the paper is to show how the OAM can be used to realize seamless integration of product information, with an emphasis on assembly, throughout all phases of a product design. A gearbox design example is used to illustrate the process.

INTRODUCTION

The OAM has been developed to overcome the interoperability issues between different CAD tools (e.g.,, SolidWorks, Pro/Engineer, I-DEAS, CATIA[1], etc.) during different phases of an assembly design. The main difference of the proposed OAM from any other available standard is that the model is not established at the end of the product design; instead, the model slowly evolves from an incomplete, preliminary form to a complete model as the design progresses from conceptual to detailed design phases. In the beginning, the model starts with customer specified functions and behavioral requirements. Once the design is finished, the OAM databases contain detailed information regarding function, behavior, form/structure, kinematics, assembly and tolerance information for the whole product.

The OAM information model includes both assembly as a concept and assembly as a data structure. The geometry information of the OAM is based on the STEP application protocol and necessary information is extracted from the STEP's data structure. Other design information related to the function, behavior, design rationale, priorities, tolerance etc. is manually built up in the model. In this paper, a gearbox design problem has been discussed to show the value added information that we are providing in the OAM to realize seamless integration of product information throughout all phases of a product design. As shown in Figure 1, the OAM is well integrated with different phases of the design and it provides the interoperability platform between different CAD agents by facilitating information exchange through appropriate OAM databases.

REVIEW OF RELATED WORK

Currently there are various research efforts towards developing standards for product representation. ISO 10303 [3] has some limited assembly design representations that capture the assembly structure and kinematic joint information during the design process.

[1] SolidWorks, Pro/Engineer, I-DEAS, CATIA are registered trademarks

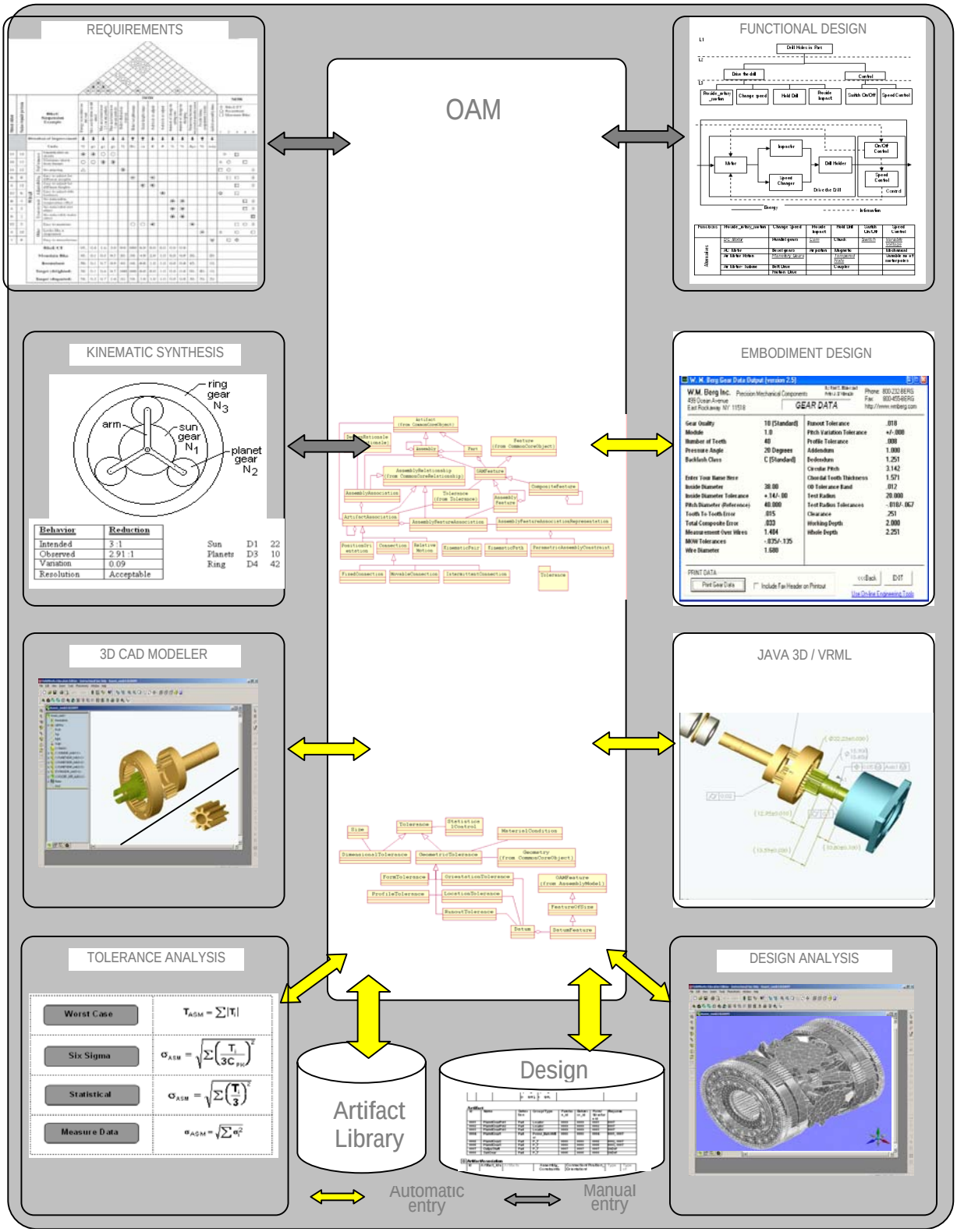

Figure 1: The Use of OAM Model in Different Design Phases

The model focuses on the hierarchy of the product, and the position and orientation between parts. For an effective use of this assembly model in any analysis tasks such as kinematic analysis of assemblies, animation of assemblies for digital mockup technologies, assembly/disassembly process planning from the view point of CAD/CAM systems or tolerance analysis and synthesis, the model must be upgraded with more information other than product geometry only.

NIST Core Product Model (CPM) [4] was developed for representing design information throughout the product lifecycle. The core model focuses on artifact representation including function, form, behavior, geometry and material; physical and functional decompositions; and relationships among these concepts. NIST CPM can be extended to include other concerns. The OAM is one such effort. OAM defines a system level conceptual model and the hierarchical assembly relationships. A brief description of this model is provided below.

THE OPEN ASSEMBLY MODEL

Most electromechanical products are assemblies of components. The aim of the Open Assembly Model (OAM) is to provide a standard representation and exchange protocol for assembly and system-level tolerance information. OAM is extensible; it currently provides for tolerance representation and propagation, representation of kinematics, and engineering analysis at the system level [3]. The assembly information model emphasizes the nature and information requirements for part features and assembly relationships. The model includes both assembly as a concept and assembly as a data structure. For the latter it uses the model data structures of ISO 10303, informally known as the STandard for the Exchange of Product model data (STEP).

Figure 2 shows the main schema of the Open Assembly Model. The schema incorporates information about assembly relationships and component composition; the former is represented by the class **AssemblyAssociation**, and the latter is modeled using part-of relationships. The class **AssemblyAssociation** represents the component assembly relationship of an assembly. It is the aggregation of one or more **Artifact Association**s.

An **ArtifactAssociation** class represents the assembly relationship between one or more artifacts. For most cases, the relationship involves two or more artifacts. In some cases, however, it may involve only one artifact to represent a special situation. Such a case may occur when an artifact is to be fixed in space for anchoring the entire assembly with respect to the ground. It can also occur when kinematic information between an artifact at an input point and the ground is to be captured. Such cases can be regarded as relationships between the ground and an artifact. Hence, we allow the artifact association with one artifact associated in these special cases.

An **Assembly** is decomposed into subassemblies and parts. A **Part** is the lowest level component. Each assembly component (whether a sub-assembly or part) is made up of one or more features, represented in the model by **OAMFeature**. The **Assembly** and **Part** classes are subclasses of the CPM **Artifact** class and **OAMFeature** is a subclass of the CPM **Feature** class.

Artifact Association is specialized into the following classes: PositionOrientation, RelativeMotion and Connection. PositionOrientation represents the relative position and orientation between two or more artifacts that are not physically connected and describes the constraints on the relative position and orientation between them. RelativeMotion represents the relative motions between two or more artifacts that are not physically connected and describes the constraints on the relative motions between them. Connection represents the connection between artifacts that are physically connected.

Connection is further specialized as **FixedConnection, MovableConnection,** or **IntermittentConnection**. **FixedConnection** represents a connection in which the participating artifacts are physically connected and describes the type and/or properties of the fixed joints. **MovableConnection** represents the connection in which the participating artifacts are physically connected and movable with respect to one another and describes the type and/or properties of kinematic joints. **IntermittentConnection** represents the connection in which the participating artifacts are physically connected only intermittently.

OAMFeature has tolerance information, represented by the class **Tolerance**, and subclasses **AssemblyFeature** and **CompositeFeature**. **CompositeFeature** represents a composite feature that can be decomposed into multiple simple features. **AssemblyFeature,** a sub-class of **OAMFeature,** is defined to represent assembly features. Assembly features are a collection of geometric entities of artifacts. They may be partial shape elements of any artifact. For example, consider a shaft-bearing connection. A bearing's hole and a shaft's cylinder can be viewed as the assembly features that describe the physical connection between the bearing and the shaft. We can also think of geometric elements such as planes, screws and nuts, spheres, cones, and tori as assembly features.

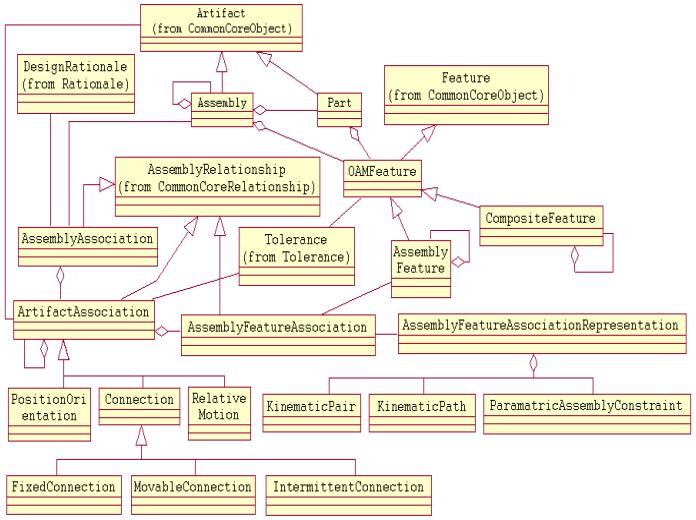

Figure 2: Main Schema of Open Assembly Model

The class **AssemblyFeatureAssociation** represents the association between mating assembly features through which relevant artifacts are associated. The class **ArtifactAssociation** is the aggregation of **AssemblyFeatureAssociation**. Since associated artifacts can have multiple feature-level associations when assembled, one artifact association may have several assembly features associations at the same time. That is, an artifact association is the aggregation of assembly feature associations. Any assembly feature association relates in general to two or more assembly features. However, as in the

special case where an artifact association involves only one artifact, it may involve only one assembly feature when the relevant artifact association has only one artifact. The class **AssemblyFeatureAssociationRepresentation** represents the assembly relationship between two or more assembly features**.** This class is an aggregation of parametric assembly constraints, a kinematic pair, and/or a relative motion between assembly features.

ParametricAssemblyConstraint specifies explicit geometric constraints between artifacts of an assembled product, intended to control the position and orientation of artifacts in an assembly. Parametric assembly constraints are defined in ISO 10303-108 [16]. This class is further specialized into specific types: **Parallel**, **ParallelWithDimension**, **SurfaceDistanceWithDimension**, **AngleWithDimension**, **Perpendicular**, **Incidence**, **Coaxial**, **Tangent**, and **FixedComponent**.

KinematicPair defines the kinematic constraints between two adjacent artifacts (links) at a joint. The kinematic structure schema in ISO 10303-105 defines the kinematic structure of a mechanical product in terms of links, pairs, and joints. The kinematic pair represents the geometric aspects of the kinematic constraints of motion between two assembled components. **KinematicPath** represents the relative motion between artifacts. The kinematic motion schema in ISO 10303-105 defines kinematic motion. It is also used to represent the relative motion between artifacts.

Tolerancing is a critical issue in the design of electro-mechanical assemblies. Tolerancing includes both tolerance analysis and tolerance synthesis. In the context of electro-mechanical assembly design, tolerance analysis refers to evaluating the effect of variations of individual part or subassembly dimensions on designated dimensions or functions of the resulting assembly. Tolerance synthesis refers to allocation of tolerances to individual parts or sub-assemblies based on tolerance or functional requirements on the assembly. Tolerance design is the process of deriving a description of geometric tolerance specifications for a product from a given set of desired properties of the product. Existing approaches to tolerance analysis and synthesis entail detailed knowledge of the geometry of the assemblies and are mostly applicable only during advanced stages of design, leading to a less than optimal design.

During the design of an assembly, both the assembly structure and the associated tolerance information evolve continuously; significant gains can thus be achieved by effectively using this information to influence the design of that assembly. Any proactive approach to assembly or tolerance analysis in the early design stages will involve making decisions with incomplete information models. In order to carry out early tolerance synthesis and analysis in the conceptual product design stage, we include function, tolerance, and behavior information in the assembly model; this will allow analysis and synthesis of tolerances even with the incomplete data set. In order to achieve this we define a class structure for tolerance specification, and we describe this in Figure 3.

DimensionalTolerance typically controls the variability of linear dimensions that describe location, size, and angle; it is also known as tolerancing of perfect form. This is included to accommodate the ISO 1101 standard [17]. **GeometricTolerance** is the general term applied to the category of tolerances used to control shape, position, and runout. It enables tolerances to be placed on attributes of features, where a feature is one or more pieces of a part surface; feature attributes include size (for certain features), position (certain features), form (flatness, cylindricity, etc.), and relationship (e.g.,, perpendicular-to). The class **GeometricTolerance** is further specialized into the following: (1) **FormTolerance**; (2) **ProfileTolerance**; (3) **RunoutTolerance**; (4) **OrientationTolerance**; and (5) **LocationTolerance**.

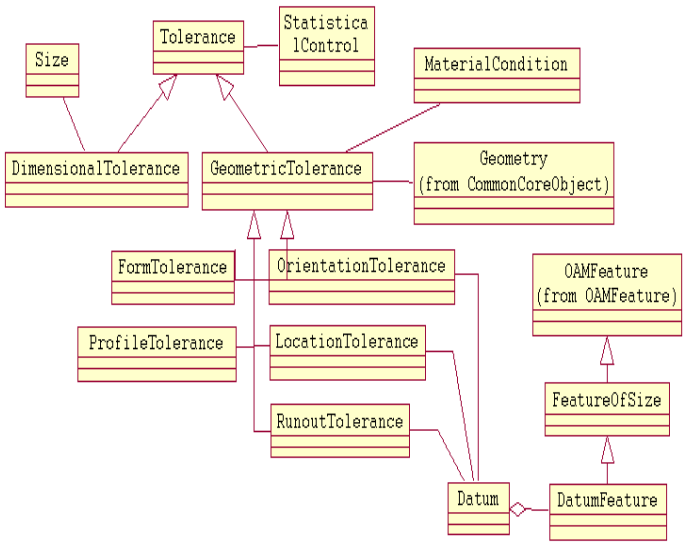

Figure 3: Tolerance Model

Datum is a theoretically exact or a simulated piece of geometry, such as a point, line, or plane, from which a tolerance is referenced. **DatumFeature** is a physical feature that is applied to establish a datum. **FeatureOfSize** is a feature that is associated with a size dimension, such as the diameter of a spherical or cylindrical surface or the distance between two parallel planes. **StatisticalControl** is a specification that incorporates statistical process controls on the toleranced feature in manufacturing.

USE OF THE OAM IN DIFFERENT DESIGN PHASES

In the beginning of product lifecycle management (PLM), the customer needs and other requirements are defined (Figure 1). The functional design is carried out according to these requirements. The relevant information is mapped into related tables (Artifact, Function, Behavior, and Form) in the OAM in terms of these engineering specifications. The objects are mapped into relational tables. We are looking into the normalization issues regarding mapping into relational databases. These requirements are defined as different types of constraints (as bound and unbound parameters), functions, behaviors, and forms of the artifact in the appropriate database tables. Different critical parameters (or features) are also considered.

We take the example of the Planetary Gear Transmission of the cordless drill as described in [1] and follow its design information flow to show how the OAM is developed and populated throughout the design process. Based on the given specifications of a gearbox example for functional and form requirements, we explore the criteria of the angular velocity

reduction as the required primary function and the secondary functions are the form requirements as described below:

Function Requirements:

1. Flow— Change_Speed_of_rotation.
2. Input— Kinetic (rotational)Energy.
   (a) speed = 900 rpm (low) and 1800 rpm (high).
   (b) torque = 2.26 N•m (max value).
3. Output— Kinetic (rotational)Energy.
   (a) speed = 300 rpm (low) and 600 rpm (high).
   (b) torque = 6.78 N•m (max value).

Form Requirements:

1. Concentric shafts, the overall length should allow mating with output shaft of motor, mating with input shaft of chuck, concentric center of gravity (symmetry).
2. Size restriction
   (a) Length < 100 mm
   (b) Width < 60 mm
   (c) Height < 60 mm.

incorporates information on gear design.

Description:

(a) Bound Parameters— (input speed and torque values)
(b) Unbound Parameters
   i. Sun Gear Size
   ii. Planetary Gear(s) Size
   iii. Ring Gear Size.

Intended Behavior: (this data goes to the Behavior table)

(a) Gear ratio of 3:1.
(b) Output torque of 6.78 N•m from a motor torque of 2.26 N•m.
(c) Diameter less than 60 mm.

Behavior Model: The derivation for the angular velocity reduction found by using the general equation for a planetary gear train of this configuration.

Id	Name	Art_ID	Type	Input	Output	Other_Effects	Constraints	Bound Parameters	Unbound Parameters
0001	Change_Speed_of_rotation	0013	Gearbox	Kinetic (rotational) Energy	Kinetic (Rotational) Energy	Heat_generation, Change_of_Torque	Size (L_T, D_T) weight, cost	{Speed_in = 1800 rpm, Torque_in=2.26N-m}	{OutputSpeed, OutputTorque, SpeedRatio, Form}

Table 1. Function Table for an Artifact that Facilitates a Change in Speed_of_Rotation

These functional requirements of the artifact are input to the OAM as shown in the Function table (Table 1). For this particular example, the main function of the gearbox is to facilitate a change in speed of rotation. Both input and output energies are kinetic (rotating) energy. For this artifact, there are size and weight constraints. There are also some functional parameters which are bound parameters such as speed_in = 1800 rpm, Torque_in = 2.26N-m as well as other unbound parameters (which can vary) like OutputSpeed, OutputTorque, SpeedRatio, and Form.

Once the functions are defined, conceptualization phase of the design begins. Not much information exchange takes place with the OAM at this stage until an artifact is selected. Based on the functional specification, a multi-stage constrained optimization based design synthesis process [9, 10, 11] (in consultation with an existing design repository/library) is carried out to select an appropriate planetary gear system to attain the desired functional goal of changing the speed of the drill. The planetary gearbox solution establishes an abstract form as shown in Figure 4. This abstract form includes the various components such as the sun, planet and ring gears that are connected by an arm. The sizes of the gear establish the speed reduction behavior of the gearbox. The behavior model

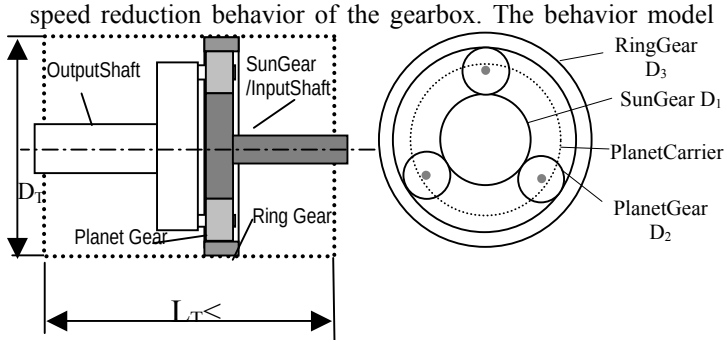

Figure 4: Basic Planetary Gear System

$$\frac{\omega_{in}}{\omega_{out}} = 1 + \frac{N_{ring}}{N_{sun}} = 1 + \frac{D_{ring}}{D_{sun}}$$

Here, ω represents the rotational speed, N, the number of teeth and D, the pitch diameter of the gears.

Function

The family of solutions now contains bound and unbound parameters and a behavior model. The behavior description of the Gearbox Artifact is given in Table 2.

Behavior

Id	Name	Intended_Behavior	Evaluated_Behavior	Acceptable (Yes or No)
0001	Rotating_Mechanical_Energy	{SpeedReduction=3:1, Torque= 6.78 N•m , Shafts_direction=Collinear	{Speed Ratio=2.91:1, OutputTorque = 6.99 N•m, Shafts_direction=Collinear	Yes

Table 2. Behavior of the Gearbox Artifact without Assembly Analysis.

An instantiation of a single planetary gear train is necessary at this point, and it needs to go through an analysis to describe its intended behavior. We need to carry out checks for the meshing validation, pitch diameter validation, overlap validation, etc., for the gear train. After the validation analysis of the gearbox, it is needed to modify some unbound form parameters, so that the observed behavior is acceptable (Table 3).

Behavior

Id	Name	Intended_Behavior	Evaluated_Behavior	Acceptable (Yes or No)
0001	Rotating_Mechanical_Energy	{SpeedReduction= 3.0:1, Torque= 6.78 N•m, Shafts_direction= Collinear	{Speed Ratio = 3.0:1, OutputTorque = 6.78 N•m, Shafts_direction=Collinear	Yes

Table 3. Behavior of the Gearbox Artifact after the Assembly Validation Analysis.

The form of the artifact can be viewed as the design solution for the design problem specified by the functions. In the OAM, as mentioned, the artifact's physical characteristics are represented in terms of geometry and material properties. Form information of the gearbox assembly (Art_0013) from the preliminary design phase is given in Table 4 including its bound and unbound parameters. Similarly, form information of other artifacts is added in the same table.

Form

Id	Art_ID	Bound Parameters	Unbound Parameters
0001	0013	L_T< 100 mm, D_T< 60 mm,	D_1, D_3, D_4, L_1, L_2, L_3, L_4, L_5

Table 4. Form Table of the Gearbox Assembly (Art_0013)

It is also necessary to describe the kinematic behavior of the artifact. Coordinate systems are first assigned to the KinematicPairs in the OAM (see Figure 5) by using a special user interface. KinematicPair defines the kinematic constraints between two associated artifacts (Transfer_item_1 and 2) at a joint. PairRange, PairValue and two "PairFrame" are specified in KinematicPair table (Table 5) as defined in the figure. This KinematicPair information is also defined in specific tables according to the KinematicPair type like RevolutePair, GearPair etc. (Tables 6 and 7). GearPair table (Table 7) shows radii of the gears (radius_first_link, radius_second_link), gear_ratio, Bevel and helical_angle.

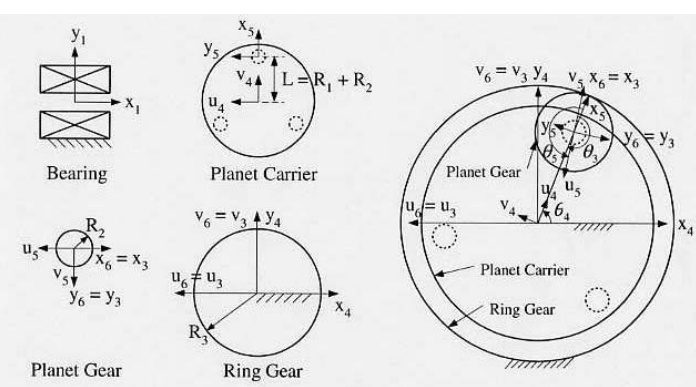

Figure 5: Coordinate Systems Assigned to KinematicPairs [6].

KinematicPair

Id	Name (or type)	Description	Transform_item_1	Transform_item_2	Frames	Pair Var.s
RP_1	RevoluteP	RevoluteP	UnknownSupport	Art_0008 (Sungear)	{x1 y1 z1 } - {u1 v1 w1 }	θ1
RP_2	RevoluteP	RevoluteP	Art_0004 (Planetgear1)	Art_0010 (PlanetCarrierSubA)	{x5 y5 z5 } - {u5 v5 w5 }	θ5
RP_3	RevoluteP	RevoluteP	Art_0005 (Planetgear2)	Art_0010 (PlanetCarrierSubA)	-	-
RP_4	RevoluteP	RevoluteP	Art_0006 (Planetgear3)	Art_0010 (PlanetCarrierSubA)	-	-
RP_5	RevoluteP	RevoluteP	Art_0010 (PlanetCarrierSubA)	Bearing	{x4 y4 z4 } - {u4 v4 w4 }	θ4
GP_1	GearPair	Gear Pair	Art_0008 (Sungear)	Art_0004 (Planetgear1)	{x2 y2 z2 } - {u2 v2 w2 }	θ2
GP_2	GearPair	Gear Pair	Art_0008 (Sungear)	Art_0005 (Planetgear2)	-	-
GP_3	GearPair	Gear Pair	Art_0008 (Sungear)	Art_0006 (Planetgear3)	-	-
GP_4	GearPair	Gear Pair	Art_0004 (Planetgear1)	Art_0009 (RingGear)	{x3 y3 z3 } - {u3 v3 w3 }	θ3
GP_5	GearPair	Gear Pair	Art_0005 (Planetgear2)	Art_0009 (RingGear)	-	-
GP_6	GearPair	Gear Pair	Art_0006 (Planetgear3)	Art_0009 (RingGear)	-	-

Table 5. KinematicPair Table of Gearbox Assembly.

RevolutePair

Id	Name	Transform_item_1	Transform_item_2	PairValue	Pair Range*	Frame1	Frame2
RP_1	RP_1	UnknownSupport	Art_0008 (Sungear)	Rotation_angle = θ_1	-	{x_1 y_1 z_1 }	{u_1 v_1 w_1 }
RP_2	RP_2	Art_0004 (Planetgear1)	Art_0010 (PlanetCarrierSubA)	Rotation_angle = θ_2	-	{x_1 y_1 z_1 }	{u_1 v_1 w_1 }
RP_3	RP_3	Art_0005 (Planetgear2)	Art_0010 (PlanetCarrierSubA)	Rotation_angle = θ_3	-	{x_1 y_1 z_1 }	{u_1 v_1 w_1 }
RP_4	RP_4	Art_0006 (Planetgear3)	Art_0010 (PlanetCarrierSubA)	Rotation_angle = θ_4	-	{x_1 y_1 z_1 }	{u_1 v_1 w_1 }
RP_5	RP_5	Art_0010(PlanetCarrierSubA)	Bearing	Rotation_angle = θ_5	-	{x_1 y_1 z_1 }	{u_1 v_1 w_1 }

Table 6. RevolutePair Table of Gearbox Assembly

GearPair

Id	Transform_item_1	Transform_item_2	radius_first_link	radius_second_link	gear_ratio	Bevel (plane_angle_measure)	helical_angle (plane_angle_measure)
GP_1	Art_0008	Art_0004	11	4.5	2.44	0	0
GP_2	Art_0008	Art_0005	11	4.5	2.44	0	0
GP_3	Art_0008	Art_0006	11	4.5	2.44	0	0
GP_4	Art_0004	Art_0009	4.5	20	4.44	0	0
GP_5	Art_0005	Art_0009	4.5	20	4.44	0	0
GP_6	Art_0006	Art_0009	4.5	20	4.44	0	0

Table 7. GearPair Table of Gearbox Assembly.

At the embodiment design stage, all the geometry, material properties and other specifications are designed and specified. Requirements are taken from behavior information for each artifact; the results are mapped into the related FunctionOfArtifact table. We may need to analyze these results in three categories: (i) for features of each individual part, (ii) for each part of an assembly and (iii) for the whole assembly.

Embodiment design overlaps with detail design and incorporates, as appropriate, both layout design (the layout, arrangement or disposition of assemblies, components and parts and their relative motions) and form design (the shapes, dimensions and materials of individual parts). Here, we design the planetary gears' teeth and face widths.

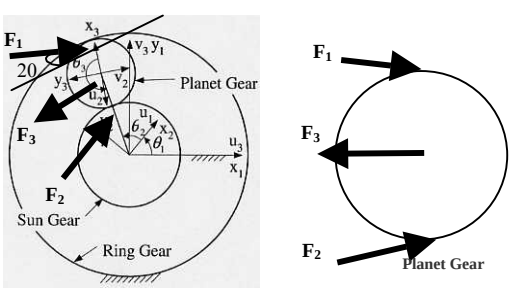

Figure 6: Force Diagram of the Planetary

From the force diagram (Figure 6), the forces are calculated as:

$$F_1 = \frac{T}{r} = \frac{6.78\,Nm}{0.005\,m} = 1356\,N, \quad F_2 = F_1 = 1356\text{ N},$$

$$F_3 = 2 * F_1 * \cos(20°) = 2548\,N;$$

the bending stress is calculated as

$$\sigma_b = \frac{F_t}{m\,Face\,Y},$$

so the face width is calculated as

$$Face = \frac{F_t}{m\,Y\,\sigma_b} = 23\,mm$$

After these calculations and material selection, the values of the function related attributes (pitch_dia, face_width, shaft_dia, n_teeth, sb_max, sc_max, st_max, E, G, rho) could be mapped into related FunctionofArtifact table that is derived from the Artifact Library.

All the parts and subassemblies are modeled in a typical solid modeling system, SolidWorks. Also, assembly relations are assigned (assembly constraints/mates) and the entire assembly is created. By using the STEP files (or using appropriate APIs for the 3D CAD modeler), all assembly related information for each artifact is extracted and mapped into related database tables in the OAM. For this purpose, we developed programs in C++ (or JAVA etc.) for extracting required data from part files. SolidWorks provides convenient tools to manage the APIs. However, if the OAM were accepted as the standard for the product representation in future, we could extract appropriate information from STEP files using some appropriate software.

3D MODELING AND EXTRACTING ATTRIBUTES FOR THE OAM

The OAM is a model for product assembly representation and will be based on STEP. STEP files mainly focus on the geometry aspects of the product where as the OAM describes goes beyond geometry by incorporating semantics information. Some of the information of the product can be directly extracted from STEP files (where the solid model for the entire assembly is ready) to build the OAM databases.

In this section, we discuss what information needs to be extracted from the part's STEP file and how it is used. The procedure for extracting OAM information from the part/assembly files follows the following nine steps:

1) Extract/List all artifacts (parts/subassemblies in Figure 7)
2) List all assembly mates/constraints with assembly features (Table 9 and 10),
3) Group assembly mates/constraints for assembly features, and define artifact associations with attributes (Tables 11,12,13),
4) Define assembly feature associations (AFA) based on these groups (Table 15),
5) For each AFA define AFAR (Relationship) subclasses [2] with
   - ParametricAssemblyConstraint (explicit geometric constraints between artifacts)
   - KinematicPair (according to mate groups in AFA)
   - KinematicPath
6) Create Artifact Association Table (Table 11) by
   - Defining connection type (fixed, movable, intermittent)
   - Defining PositionOrientation (w/o contact, takes info from ParametricAssemblyConstraint)
   - Define RelativeMotion (w/o contact)
7) Create Assembly Association,
8) List/extract Geometric Tolerances, and
9) Create OAM Feature class/table.

We illustrate this procedure by considering the particular gearbox example. Assembly mates/constraints are defined by assigning mate conditions to related geometric entities in the SolidWorks as shown in Figure 8. Mates/Constraints are then extracted and stored in the AssemblyConstraint database table

(Table 9). The assembly mates/constraints in assembly/part files are used to identify the assembly features, which are represented in Table 10. Also, the AssemblyFeatures can be defined manually through user interface (Table 18). By using the information in Tables 8 and 9, the ArtfactAssociation table is filled with necessary information including associated artifacts, assembly constraints and association type. An artifact association can be of three types: connection, position, orientation and relative motion.

Figure 7. 3D Models of Artifacts (Parts, Subassemblies) Modeled in SolidWorks

The physically connected artifact associations are described in Connection table (Table 12) with connection type (movable, fixed and intermittent connection), related assembly features, assembly constraints, and the kinematic pair information. There are also some associations between artifacts that are not directly connected to each other. These are called PositionOrientation and similarly define the artifact association as in Connection. The related assembly features and kinematic relations between artifacts are defined in the AssemblyRelation table (Table 14). From the information given in Table 14, the associated assembly features can be determined and shown in Table 15 as individual assembly features, unlike in the ArtifactAssociation table. AssemblyFeatureAssociation and Connection/PositionOrientation/ RelativeMotion classes aggregate the ArtifactAssociation, and then the ArtifactAssociation aggregates the AssemblyAssociation (Table 16).

Artifact

Id	Name	Definition	Group/ Type	Function _Id	Behavior _Id	Form/ Structure Id	Requires
0001	PlanetGearPin 1	Part	Locator	0009	0009	0001	0007
0002	PlanetGearPin 2	Part	Locator	0009	0009	0002	0007
0003	PlanetGearPin 3	Part	Locator	0009	0009	0003	0007
0004	PlanetGear1	Part	P_T	0008	0008	0004	0001, 0007
0005	PlanetGear2	Part	P_T	0008	0008	0005	0002, 0007
0006	PlanetGear3	Part	P_T	0008	0008	0006	0003, 0007
0007	OutputShaft	Part	P_T	0007	0007	0007	UnDef
0008	SunGear	Part	P_T	0006	0006	0008	UnDef
0009	RingGear	Part	P_T	0005	0005	0009	UnDef
0010	PlanetCarrierS ubAssembly	SA	P_T, Locator	0004	0004	0010	0001, 2, 3, 7
0011	PlanetGearCar rierSubassemb ly	SA	P_T	0003	0003	0011	0004,5,6,7, 10
0012	PlanetGearSu bassembly	SA	P_T	0002	0002	0012	0008,9,11
0013	Planetary_Gea rBox_Subasse m.	SA	P_T	0001	0001	0013	0012,UnDef

Table 8. Artifacts and Their Attributes.

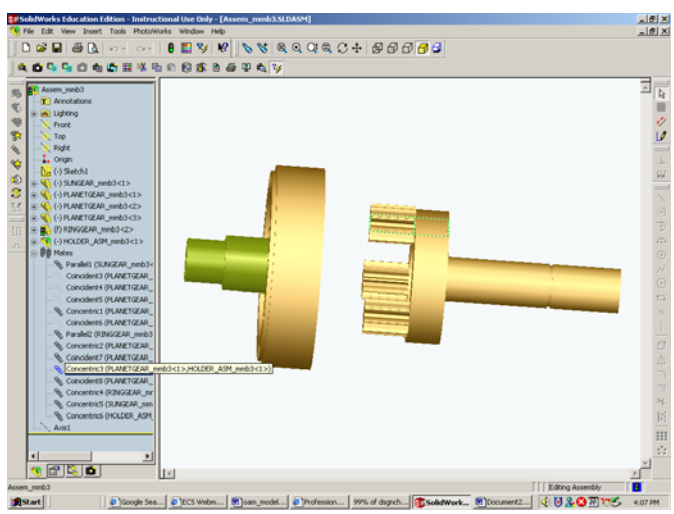

Figure 8. A Typical SolidWorks Screen Showing Assembly Mates/Constraints for Gearbox Assembly.

AssemblyConstraint					
Id	Artifacts	MF (MatingFeatures)	Type	PosOr_Value	Assembly (can be also used Id)
AC_1	OutputShaft, PlanetGearPin_1	Cylindrical_PinHoleSurface_1, CylindricalPinSurface_1	Coaxial	Null	PlanetCarrierSubAssembly
AC_2	OutputShaft, PlanetGearPin_1	Flat_PinHoleSurface_1, Flat_PinSurface_1	Coincident/Parallel	?	PlanetCarrierSubAssembly
AC_3	OutputShaft, PlanetGearPin_2	Cylindrical_PinHoleSurface_2, CylindricalPinSurface_2	Coaxial	Null	PlanetCarrierSubAssembly
AC_4	OutputShaft, PlanetGearPin_2	Flat_PinHoleSurface_2, Flat_PinSurface_2	Coincident/Parallel	?	PlanetCarrierSubAssembly
AC_5	OutputShaft, PlanetGearPin_3	Cylindrical_PinHoleSurface_3, CylindricalPinSurface_3	Coaxial	Null	PlanetCarrierSubAssembly
AC_6	OutputShaft, PlanetGearPin_3	Flat_PinHoleSurface_3, Flat_PinSurface_3	Coincident/Parallel	?	PlanetCarrierSubAssembly
AC_7	PlanetGearPin_1, PlanetGear_1	Cylindrical_PinHoleSurface_1, JournalSurface_Gear_1	Coaxial	Null	PlanetGearCarrierSubassembly
AC_8	PlanetGearPin_1, PlanetGear_1	FlatSurface_OutputShaft, FlatSurface_PlanetGear_1	Coincident/Parallel	?	PlanetGearCarrierSubassembly
AC_9	PlanetGearPin_2, PlanetGear_2	Cylindrical_PinHoleSurface_2, JournalSurface_Gear_2	Coaxial	Null	PlanetGearCarrierSubassembly
AC_10	PlanetGearPin_2, PlanetGear_2	FlatSurface_OutputShaft, FlatSurface_PlanetGear_2	Coincident/Parallel	?	PlanetGearCarrierSubassembly
AC_11	PlanetGearPin_3, PlanetGear_3	Cylindrical_PinHoleSurface_3, JournalSurface_Gear_3	Coaxial	Null	PlanetGearCarrierSubassembly
AC_12	PlanetGearPin_3, PlanetGear_3	FlatSurface_OutputShaft, FlatSurface_PlanetGear_3	Coincident/Parallel	?	PlanetGearCarrierSubassembly
AC_13	OutputShaft, Sungear	CylindricalSurface_OutputShaft, JournalSurface_SunGear	Coaxial	Null	PlanetGearSubassembly
AC_14	OutputShaft, RingGear	CylindricalSurface_OutputShaft, JournalSurface_SunGear	Coaxial	Null	PlanetGearSubassembly

Table 9. AssemblyConstraints in the Gearbox Assembly.

AssemblyFeature

Id	Name	Artifact	AFA	Definition / Parameters
0001	PinHole3	0007	AFA_1	D= D_{ph3} , L= L_{ph3}
0002	PinHole4	0007	AFA_2	D= D_{ph4} , L= L_{ph4}
0003	PinHole5	0007	AFA_3	D= D_{ph5} , L= L_{ph5}
0008	PinCylinder3	0001	AFA_1	L= depth of Pinhole_1
0009	PinCylinder4	0002	AFA_2	L= depth of Pinhole_2
0010	PinCylinder5	0003	AFA_3	L= depth of Pinhole_3
0004	PinCylinder6	0001	AFA_4	L= length of GearJournal_ Surface_1
0005	PinCylinder7	0002	AFA_5	L= length of GearJournal_ Surface_2
0006	PinCylinder8	0003	AFA_6	L= length of GearJournal_ Surface_3
0007	Cylinder	0010	AFA_	D= D_{011} , L= L_{0011}
0011	GearJournal_Surface_1	0004	AFA_4	D= D_{gc1} , L= L_{gc1}
0012	GearJournal_Surface_2	0005	AFA_5	D= D_{gc2} , L= L_{gc2}
0013	GearJournal_Surface_3	0006	AFA_6	D= D_{gc3} , L= L_{gc3}
0026	Cylinder	0010	AFA_13	L= width of bearing_Journal
0027	Bearing_Journal	Bearing	AFA_13	D= D_{bj1} , W= W_{bj1}

Table 10. Assembly Features Extracted from Part/Assembly Files.

ArtifactAssociation

Id	Artifact_Ids	Artifacts	Assembly_ Constraints	Connection/ Position_ Orientation/ RelativeMotion -- Type	Type	Type of Conn
0001	0007, 0001	OutputShaft, PlanetGearPin_1	AC_1, AC_2	FC7	Conn	Fixed
0002	0007, 0002	OutputShaft, PlanetGearPin_2	AC_3, AC_4	FC8	Conn	Fixed
0003	0007, 0003	OutputShaft, PlanetGearPin_3	AC_5, AC_6	FC9	Conn	Fixed
0004	0001, 0004	PlanetGearPin_1, PlanetGear_1	AC_7, AC_8	MC2	Conn	Movable
0005	0002, 0005	PlanetGearPin_2, PlanetGear_2	AC_9, AC_10	MC3	Conn	Movable
0006	0003, 0006	PlanetGearPin_3, PlanetGear_3	AC_11, AC_12	MC4	Conn	Movable
0007	0007, 0008	OutputShaft, Sungear	AC_13	PO1	PO	-
0008	0007, 0009	OutputShaft, RingGear	AC_14	PO2	PO	-

Table 11. Artifact Associations for the Gearbox derived from Assembly Constraints/Mates.

Connection

Id	Type	Assembly Constraints	Artifacts	AssemblyFeatures	KinematicPair
FC7	Fixed	*AC_1, AC_2*	*0007, 0001*	PinHole3, PinCylinder3	Null
FC8	Fixed	*AC_3, AC_4*	*0007, 0002*	PinHole4, PinCylinder4	Null

FC9	Fixed	AC_5, AC_6	0007, 0003	PinHole5, PinCylinder5	Null
MC2	Movable	AC_7, AC_8	0001, 0004	PinCylinder6, GearJournal_Surface_1	RP_2
MC3	Movable	AC_9, AC_10	0002, 0005	PinCylinder7, GearJournal_Surface_2	RP_3
MC4	Movable	AC_11, AC_12	0003, 0006	PinCylinder8, GearJournal_Surface_3	RP_4
MC5	Movable	-	0004, 0008	Teeth_7, teeth_1	GP_1
MC6	Movable	-	0005, 0008	Teeth_9, teeth_2	GP_2
MC7	Movable	-	0006, 0008	Teeth_11, teeth_3	GP_3
MC9	Movable	-	0004, 0009	Teeth_8, teeth_4	GP_4
MC10	Movable	-	0005, 0009	Teeth_10, teeth_5	GP_5
MC11	Movable	-	0006, 0009	Teeth_12, teeth_6	GP_6
MC12	Movable	-	0010, Bearing	Cylinder, journal	RP_5

Table 12. Connections in the Gearbox Assembly

Position_ Orientation

Id	AssemblyConstraints	Artifacts	Mating Features
PO1	AC_13	0007, 0008	-
PO2	AC_14	0007, 0009	-

Table 13. Position_ Orientations the Gearbox Assembly.

Assembly Relationship

A_Id	Artifact	Assembly Features	Kinematic Relation
0001	Art_0001, 2, 3, 7	PinHole_3, 4, 5, PinCylinder_3, 4, 5	-
0002	A_0001(Art_0010), Art_0004, 5 ,6	PinCylinder_6, 7, 8, GearJournal_Surface_1, 2, 3	RelativeMotion
0003	A_0002(Art_0011), Art_0009	PlanetaryGearSurface, RingGearSurface	RelativeMotion
0004	A_0003(Art_0012), Art_000?,?	-	

Table 14. Assembly Relationships the Gearbox Assembly.

AssemblyFeatureAssociation (AFA)

Id	Art_1	Art_2	AF_1	AF_2
AFA_1	0007	0001	PinHole3	PinCylinder3
AFA_2	0007	0002	PinHole4	PinCylinder4
AFA_3	0007	0003	PinHole5	PinCylinder5
AFA_4	0001	0004	PinCylinder6	GearJournal_Surface_1
AFA_5	0002	0005	PinCylinder7	GearJournal_Surface_2
AFA_6	0003	0006	PinCylinder8	GearJournal_Surface_3
AFA_7	0004	0008	Teeth_7	teeth_1
AFA_8	0005	0008	Teeth_9	teeth_2
AFA_9	0006	0008	Teeth_11	teeth_3
AFA_10	0004	0009	Teeth_8	teeth_4
AFA_11	0005	0009	Teeth_10	teeth_5
AFA_12	0006	0009	Teeth_12	teeth_6
AFA_13	0010	Bearing	Cylinder	journal

Table 15. Assembly Feature Associations.

AssemblyAssociation

Id	Artifacts	**Artifacts**	Type of Conn
0001	0007, 0001	OutputShaft, PlanetGearPin_1	Fixed
0002	0007, 0002	OutputShaft, PlanetGearPin_2	Fixed
0003	0007, 0003	OutputShaft, PlanetGearPin_3	Fixed
0004	0001, 0004	PlanetGearPin_1, PlanetGear_1	Movable
0005	0002, 0005	PlanetGearPin_2, PlanetGear_2	Movable
0006	0003, 0006	PlanetGearPin_3, PlanetGear_3	Movable
0007	0007, 0008	OutputShaft, Sungear	
0008	0007, 0009	OutputShaft, RingGear	
0009	0004, 0008	PlanetGear_1, SunGear	Movable
0010	0005, 0008	PlanetGear_2, SunGear	Movable
0011	0006, 0008	PlanetGear_3, SunGear	Movable

Table 16. Assembly Associations for the Gearbox Assembly

Assembly

Id	Art_ID	Sub assemblyof	Sub assemblies	Parts	OAMF	AA
0001	Art_0010	0002	-	0001, 2, 3, 7	OAMF_11, 12, 13	0001, 2, 3
0002	Art_0011	0003	0001	0001, 2, 3, 4, 5, 6, 7	OAMF_5, 6	0004, 5, 6
0003	Art_0012	0004	0001,2	0001, 2, 3, 4, 5, 6, 7, 8, 9	OAMF_1, 2, 3, 4, 7, 8, 9, 10	0007, 8, 9, 10, 11
0004	Art_0013	-	0001,2,3	0001, 2, 3, 4, 5, 6, 7, 8, 9, UnDef	UnDef	UnDef

Table 17. Assemblies in the Gearbox.

Since some features cannot be directly extracted from the parts' STEP files, a separate user interface is needed to input certain data in the OAM database. In some cases, we cannot define artifact associations at all by using 3D CAD modeling packages (e.g., gear teeth associations) in assembly model. These are defined manually and inserted into ArtifactAssociations table (Table 11). We can also define some extra features/constraints (mainly the key characteristics), if necessary. "Key Characteristics" (KCs) can be explained as the critical features on the parts and assemblies that most affect the function, safety, or customer satisfaction of the product [7]. Also the form requirements about size restrictions (shown in Figure 9) can be assigned as critical features.

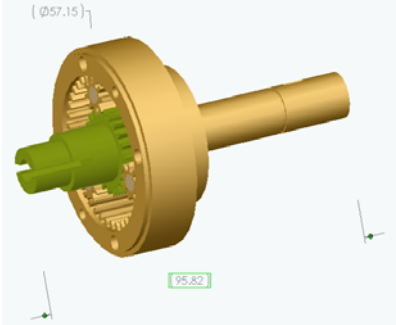

Figure 9. Size Constraints of Gearbox.

AssemblyFeature

d	Name	Artifact	AFA	Definition / Parameters
0014	Teeth_1	0008	AFA_7	Teethform_1
0015	Teeth_2	0008	AFA_8	Teethform_1
0016	Teeth_3	0008	AFA_9	Teethform_1
0017	Teeth_4	0009	AFA_10	Teethform_1
0018	Teeth_5	0009	AFA_11	Teethform_1
0019	Teeth_6	0009	AFA_12	Teethform_1
0020	Teeth_7	0004	AFA_7	Teethform_1
0021	Teeth_8	0004	AFA_10	Teethform_1
0022	Teeth_9	0005	AFA_8	Teethform_1
0023	Teeth_11	0006	AFA_9	Teethform_1
0024	Teeth_10	0005	AFA_11	Teethform_1
0025	Teeth_12	0006	AFA_12	Teethform_1
0026	Cylinder	0010	AFA_13	L= width of bearing_Journal

Table 18. Assembly features, which are, defined manually using User Interface.

TOLERANCE REPRESENTATION IN THE OAM

For tolerance synthesis and analysis, a detailed description of the kinematic functions of assembly is needed. Those functions are defined basically by the location, size, and form of associated mating features. Engineering specifications of the desired product function as specified in customer's needs in the early stages of design does not directly provide these kinematic functional specifications. They slowly evolve with the assembly as the design takes concrete shape and size in later phases of conceptual design. Tolerance synthesis and analysis needs a complete functional analysis mechanism to make sure that the identified functional requirements between the mating components of the assembly are met and are suitably described in the form of critical toleranced dimensions/sizes/forms or in the form of toleranced gaps. Roy et al [13, 14] have been studying the tolerance and synthesis representation procedure that uses the small deviation torsor scheme to represent the variations associated with each feature of a part in the assembly. Using this technique, the tolerance information generated for the sun gear and the whole gearbox has been shown in Figures 10 and 11 respectively and the correct design data is tabulated in Tables 19 and 20.

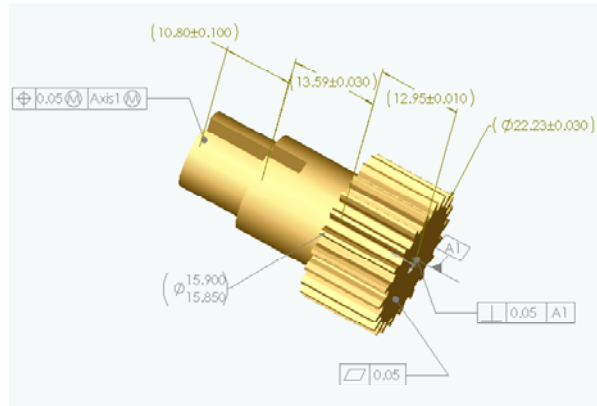

Figure 10. Geometrical and Dimensional Tolerancing on SunGear (Art_0007).

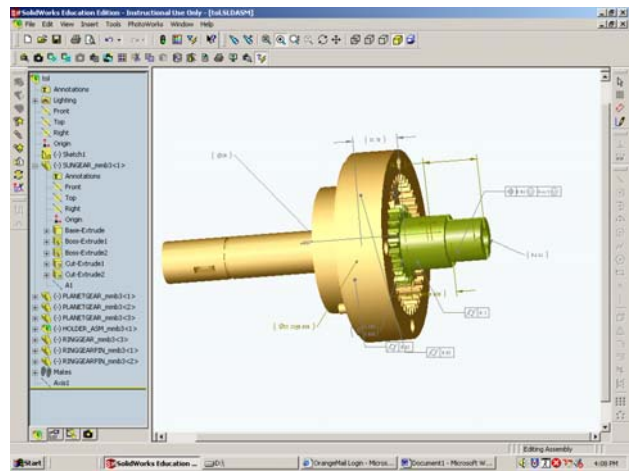

Figure 11. Tolerancing for the whole Gearbox Assembly.

In 3D modeling packages, parts are assembled by using mating conditions. These mating conditions are associated with orientation and location tolerances. For the assembly representation, we need to connect these assembly constraints (mating conditions) and geometric (orientation and location) tolerances. When assembly conditions (i.e., concentric, parallel etc.) are established, the related geometric tolerances (concentricity, parallelism) could be associated in the assembly/tolerance representation schema. As it can be seen from the Table 12, "fc7" connection has three mating conditions according to its assembly features. For the connection of this artifact association, cylindrical surfaces are coaxial (concentric) and planar surfaces are parallel. After creating an assembly representation scheme, we establish its tolerance representation. We create tolerance instance diagrams according to geometric (orientation and location) tolerances independently from the assembly representation and assembly conditions, as allowed in the SolidWorks Solid Modeling Package. We connect these assembly and tolerance representations using similar id's for same relations between parts. For the connection "fc7", we provide relations between the assembly mate and its tolerance representation according to the same connection id. Then, the appropriate relations between these "mates" and geometric tolerances are established.

Tolerance

Id	Name	Type	Artifact	OAMF	Magnitude	Datum	Modifier/Material condition
GT_1	PerpTol_1	Or_Perp	Art_0008	OAMF_EndSurface1	0.05	DatumAxis_1 (A1)	
GT_2	Flat_tol_1	Form_Fla	Art_0008	OAMF_Endsurface1	0.05	-	
DT_1	Dim_Tol_1	Dim_Tol	Art_0008	OAMF_Endsurface1	(ϕ22.23)±0.03		
DT_2	Dim_Tol_2	Dim_Tol	Art_0008	OAMF_Sungear_teeth	(12.95)±0.01		
GT_3	CylTol_1	Form_Cyl d	Art_0008	OAMF_Shank	0.1		
DT_3	Dim_Tol_3	Dim_Tol	Art_0008	OAMF_Shank	(13.59)±0.03		
DT_4	Dim_Tol_4	Dim_Tol	Art_0008	OAMF_Shank	ϕ15.85~ϕ15.85		
GT_4	Pos_Tol_1	Or_Pos	Art_0008	OAMF_inputshaft	0.05	DatumAxis_1 (A1)	MMC
DT_5	Dim_Tol_5	Dim_Tol	Art_0008	OAMF_inputshaft	(10.85)±0.10		
GT_5	CylTol_2	Form_Cyl d	Art_0004	PinHole6:AF	0.02		
DT_6	Dim_Tol_6	Dim_Tol	Art_0004	PinHole6:AF	(ϕ4.90)±0.01		
DT_7	Dim_Tol_7	Dim_Tol	Art_0004	GearCylinder1	(12.70)±0.10		
DT_8	Dim_Tol_8	Dim_Tol	Art_0004	GearCylinder1	(ϕ10.16)±0.01		
GT_6	Par_Tol_1	Form_Par	Art_0009	rimsurface	0.05	DatumPlane_3 (A3)	
DT_9	Dim_Tol_9	Dim_Tol	Art_0009	GearTeethHole	(ϕ42.62)±0.01		
DT_10	Dim_Tol_10	Dim_Tol	Art_0009	PinHole1,2	(ϕ3.30)±0.05		
GT_7	PerpTol_2	Or_Perp	Art_0007	EndSurface2	0.03	DatumAxis_2 (A2)	
GT_8	Flat_tol_2	Form_Fla	Art_0007	EndSurface2	0.06	-	
GT_9	TotRun_1	RO_Total	Art_0007	outputShaftShank	0.1	DatumAxis_2 (A2)	
GT_10	ProfSurfTol_1	Prof_Surf	Art_0007	Keyway	0.1	-	

Table 19. Tolerance class with attributes.

OAMFeature

Id	Feature	Artifact	Tol_Id
OAMF_1	EndSurface1	Art_0008	GT_1, GT_2, DT_1
OAMF_2	Sungear_teeth	Art_0008	DT_2
OAMF_3	Shank	Art_0008	GT_3, DT_3, DT_4
OAMF_4	inputshaft	Art_0008	GT_4, DT_5
OAMF_5	PinHole6:AF	Art_0004	GT_5, DT_6
OAMF_6	GearCylinder1	Art_0004	DT_7, DT_8
OAMF_7	rimsurface	Art_0009	GT_6
OAMF_8	GearTeethHole	Art_0009	DT_9
OAMF_9	PinHole1	Art_0009	DT_10
OAMF_10	PinHole2	Art_0009	DT_10
OAMF_11	EndSurface2	Art_0007	GT_7, GT_8
OAMF_12	outputShaftShank	Art_0007	GT_9
OAMF_13	Keyway	Art_0007	

Table 20. OAMFeatures of Gearbox Assembly.

CONCLUSION

Product data management is an important issue in any collaborative product design and concurrent engineering. Existing product data models are all obtained at the end of a design process and they can hardly be used during early phases of the design. Though the current assembly models describe the structure of an assembly, they cannot provide integration of functional needs and technical solutions. Hence the existing product models are not very useful in different phases of any collaborative design. The proposed OAM addresses this limitation. In this paper, we discuss the use of an OAM in a real life gearbox design to show the utility of this model. The OAM promises to provide support for the product's entire lifecycle, from the first conceptualization to the disposal, by providing a uniform framework for product information that can access, store and reuse all the product information throughout the entire lifecycle.

Disclaimer: No approval or endorsement of any commercial product by the National Institute of Standards and Technology is intended or implied. Certain commercial equipments, instruments, or materials are identified in this report in order to facilitate better understanding. Such identification does not imply recommendations or endorsement by the National Institute of Standards and Technology, nor does it imply the materials or equipment identified are necessarily the best available for the purpose.

REFERENCES

[1]. R. Sudarsan, Y.H. Han, S.C. Feng, U. Roy, F. Wang, R. D. Sriram and K Lyons, 2003, "Object Oriented Representation of Electro-Mechanical Assemblies Using UML", NISTIR 7057, October 2003.

[2]. R. Sudarsan, U. Roy, Y.H. Han, S.C. Feng, F. Wang, R.D. Sriram, and K.W. Lyons, "Object Oriented Representation of Electro-Mechanical Assemblies Using UML", IEEE International Symposium on Assembly and Task Planning, Besançon, France, July 9-11, 2003.

[3]. ISO 10303-1:1994, Industrial automation systems and integration -- Product data representation and exchange -- Part 1: Overview and fundamental principles, ISO, Geneva, Switzerland.

[4]. S.J. Fenves, " A Core Product Model for Representing Design Information, NISTIR 6736, Gaithersburg, MD 20899, 2001.

[5]. M.M. Baysal, U. Roy, R. Sudarsan, R. D. Sriram and K. W. Lyons, "Interoperability Among CAD Systems Part-2: The Open Assembly Model for the Information Exchange and Collaborative Engineering", Submitted to The 2004 ASME DETC/CIE'04 Conference, September 28 - October 2, Salt Lake City, Utah.

[6]. S. Szykman, J. W. Racz and R. D. Sriram, 1999, "The Representation Of Function In Computer-Based Design" Proceedings of the 1999 ASME Design Engineering Technical Conferences September 12-15, 1999, Las Vegas, Nevada

[7]. M. Rezayat, 2000, "Knowledge-based product development using XML and KCs", Computer-Aided Design, 32, (2000) pp: 299–309

[8]. S. B. Shooter, W. T. Keirouz, S Szykman, S and Fenves, 2000, "A Model For Information Flow In Design", Proceedings of DETC2000: ASME International Design Engineering Technical Conferences September 10-13, Baltimore, Maryland.

[9]. S. B. Shooter, W. T. Keirouz, S Szykman, S and Fenves, 2001, "A Model for the Flow of Design Information in the Open Assembly Design Environment (OpenADE), NISTIR6746.

[10]. N. Pramanik, 2003," A Generic Framework For Design Evolution: From Function-To-Form Mapping To Synthesis Of Tolerances", PhD Thesis, Syracuse University, Syracuse, NY.

[11]. E., Chang,, Li, X., and Schmidt, L.C., The Need for Form, Function, and Behavior-based Representations in Design, 2000. Lab Reports http://www.enme.umd.edu/DATLab/Abstracts/2000_chang_lab_report.PDF

[12]. S Paluri and J K Gershenson, Attribute-Based Design Description System In Design For Manufacturability And Assembly, Transactions of the Society for Design and Process Science (SDPS), June 2001, Vol. 5, No. 2, pp. 83-94.

[13]. U. Roy, N. Pramanik R. Sudarsan, R. D. Sriram and K. W. Lyons, Function-to-Form Mapping: Model, Representation and Applications in Design Synthesis, Journal of Computer-Aided Design, vol. 33, 2001, pp. 699-719.

[14]. U. Roy, N. Pramanik, H. Wang, R. Sudarsan, R. D. Sriram and K. W. Lyons, 2003, Tolerance Synthesis Scheme, NISTIR 6836, Gaithersburg, MD 20899, 2001.

[15]. ISO 10303-105:1996, Industrial automation systems and integration -- Product data representation and exchange -- Part 105: Integrated application resource: Kinematics, ISO, Geneva, Switzerland.

[16]. ISO/DIS 10303-108:2003, Product data representation and exchange: Integrated application resource: Parameterization and constraints for explicit geometric product models. International Organization for Standardization (ISO), Geneva, Switzerland.

[17]. ISO 1101:1983, Technical drawings -- Geometrical tolerancing -- Tolerancing of form, orientation, location and run-out -- Generalities, definitions, symbols, indications on drawings. International Organization for Standardization, Geneva, Switzerland.